microsonic

EVERY THING ULTRA SONIC

Extract from our online catalogue:

nero ultrasonic sensors

Current to: 2025-10-02

microsonic GmbH / Phoenixseestraße 7 / 44263 Dortmund / Germany / **T** +49 231 975151-0 / **F** +49 231 975151-51 / **E** info@microsonic.de
microsonic® is a registered trademark of microsonic GmbH. All rights reserved.

Ultrasonic proximity switch nero in M18 plastic sleeve with 4 detection ranges

HIGHLIGHTS

- Variant with 90° angled head
- UL Listed to Canadian and US safety standards

BASICS

- 1 switching output, pnp or npn basis
- Analogue output 4–20 mA or 0–10 V
- 4 detection ranges with a measurement range of 20 mm to 1.3 m
- microsonic Teach-in
- 0.2 mm resolution
- 10–30 V operating voltage

Description

nero ultrasonic proximity switches

are available in a M18 plastic sleeve. In addition to the axial beam direction variant, there is also a housing variant with a 90° angled head and radial beam direction.

The ultrasonic proximity switches detect contactless and reliable objects with four detection ranges from 20 mm to 1.3 m.

For the nero sensor family

there are 2 output stages and 4 detection ranges available:

1 switching output with pnp or npn switching technology

1 analogue output 4–20 mA or 0–10 V

Sensors with switching output have three operating modes:

- Single switching point
- Two-way reflective barrier
- Window mode

Teach-in of a single switching point

- Place object to be detected (1) at the desired distance
- Apply $+U_B$ to pin 2 for about 3 seconds
- Then apply $+U_B$ to pin 2 again for about 1 second

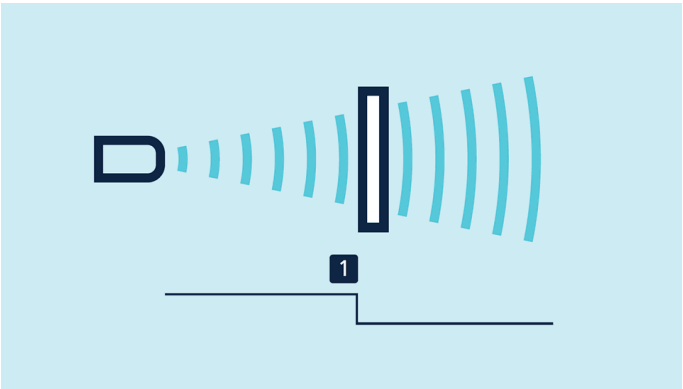

Teach-in of a switching point

Teach-in of a two-way reflective barrier

with a fixed reflector

- Apply $+U_B$ to pin 2 for about 3 seconds
- Then apply $+U_B$ to pin 2 again for about 10 seconds

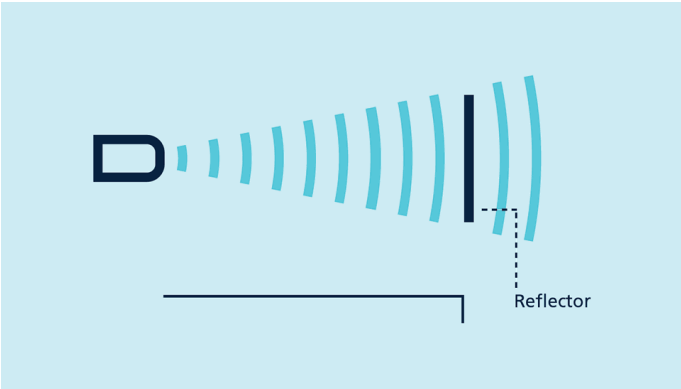

Teach-in of a two-way reflective barrier

For configuration of a window

- Place object at the near edge of the window (1)
- Apply $+U_B$ to pin 2 for about 3 seconds
- Then move the object to the far edge of the window (2)
- Then apply $+U_B$ to pin 2 again for about 1 second

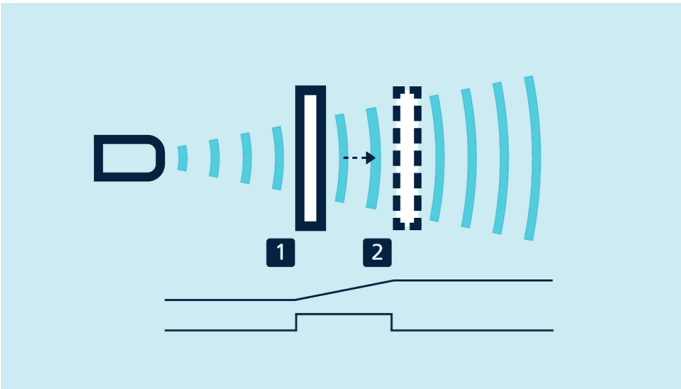

Teach-in of an analogue characteristic or a window with two switching points

NCC/NOC

and rising/falling analogue characteristic curve can also be set via pin 2.

One green and one yellow LED

indicate the state of the output and support microsonic Teach-in.

nero-15/CD

scale drawing

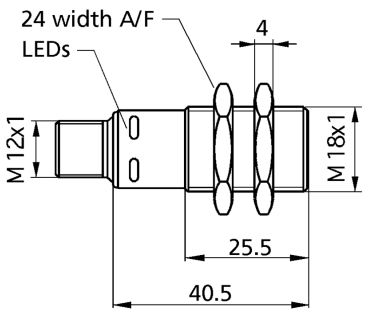

detection zone

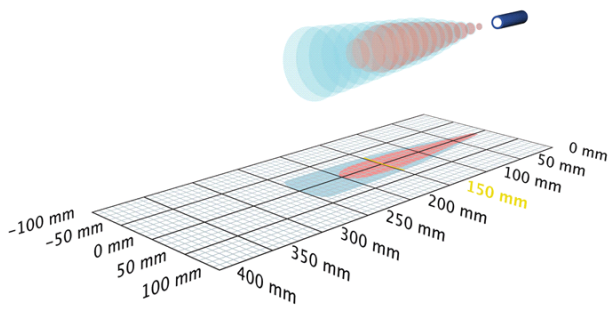

1 x pnp

250 mm

measuring range	25 - 250 mm
design	cylindrical M18
operating mode	proximity switch/reflective mode reflective barrier window mode
particularities	UL Listed

ultrasonic-specific

means of measurement	echo propagation time measurement
transducer frequency	380 kHz
blind zone	25 mm
operating range	150 mm
maximum range	250 mm
resolution	0.20 mm
reproducibility	± 0.15 %
accuracy	temperature drift 0.17 %/K

electrical data

operating voltage U_B	10 - 30 V d.c., reverse polarity protection
voltage ripple	± 10 %
no-load current consumption	≤ 40 mA
type of connection	4-pin M12 initiator plug

nero-15/CD

outputs	
output 1	switching output pnp: I_{max} = 200 mA (U_B-2V)
switching hysteresis	2.0 mm
switching frequency	25 Hz
response time	32 ms
delay prior to availability	< 300 ms

inputs	
input 1	Teach-in input

housing	
material	PBT
ultrasonic transducer	polyurethane foam, epoxy resin with glass contents
max. tightening torque of nuts	1 Nm
class of protection to EN 60529	IP 67
operating temperature	-25°C to +70°C
storage temperature	-40°C to +85°C
weight	15 g
further versions	90° angular head
further versions	nero-15/WK/CD

technical features/characteristics	
temperature compensation	no
controls	control input
scope for settings	Teach-in
Synchronisation	no
multiplex	no
indicators	1 x LED green: working, 1 x LED yellow: switch status
particularities	UL Listed

nero-15/CD

pin assignment

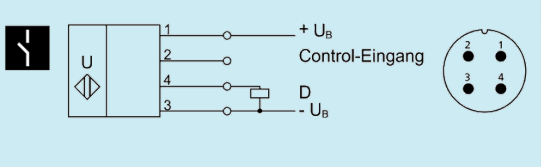

order no.	**nero-15/CD**

The content of this document is subject to technical changes. Specifications in this document are presented in a descriptive way only. They do not warrant any product features.

nero-15/WK/CD

scale drawing

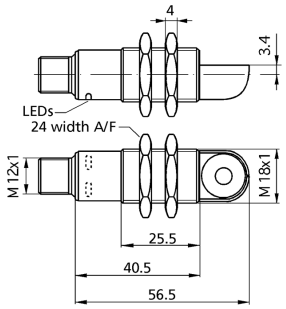

detection zone

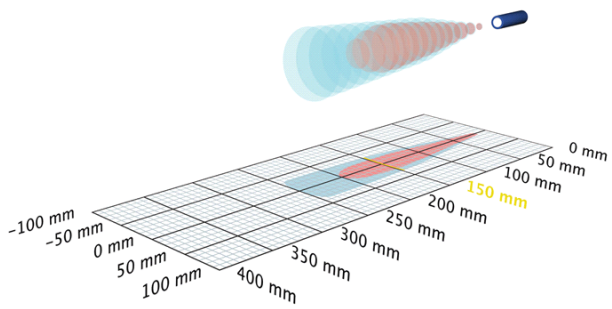

1 x pnp

250 mm

measuring range	25 - 250 mm
design	cylindrical M18
operating mode	proximity switch/reflective mode reflective barrier window mode
particularities	90° angular head UL Listed

ultrasonic-specific

means of measurement	echo propagation time measurement
transducer frequency	380 kHz
blind zone	25 mm
operating range	150 mm
maximum range	250 mm
resolution	0.20 mm
reproducibility	± 0.15 %
accuracy	temperature drift 0.17 %/K

electrical data

operating voltage U_B	10 - 30 V d.c., reverse polarity protection
voltage ripple	± 10 %
no-load current consumption	≤ 40 mA
type of connection	4-pin M12 initiator plug

nero-15/WK/CD

outputs	
output 1	switching output pnp: I_{max} = 200 mA (U_B-2V)
switching hysteresis	2.0 mm
switching frequency	25 Hz
response time	32 ms
delay prior to availability	< 300 ms

inputs	
input 1	Teach-in input

housing	
material	PBT
ultrasonic transducer	polyurethane foam, epoxy resin with glass contents
max. tightening torque of nuts	1 Nm
class of protection to EN 60529	IP 67
operating temperature	-25°C to +70°C
storage temperature	-40°C to +85°C
weight	20 g

technical features/characteristics	
temperature compensation	no
controls	control input
scope for settings	Teach-in
Synchronisation	no
multiplex	no
indicators	1 x LED green: working, 1 x LED yellow: switch status
particularities	90° angular head UL Listed

nero-15/WK/CD

pin assignment

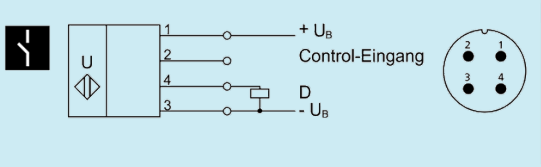

order no.	**nero-15/WK/CD**

The content of this document is subject to technical changes. Specifications in this document are presented in a descriptive way only. They do not warrant any product features.

nero-15/CE

scale drawing

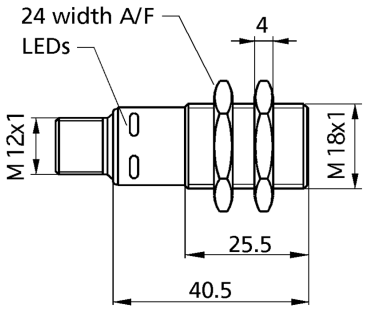

detection zone

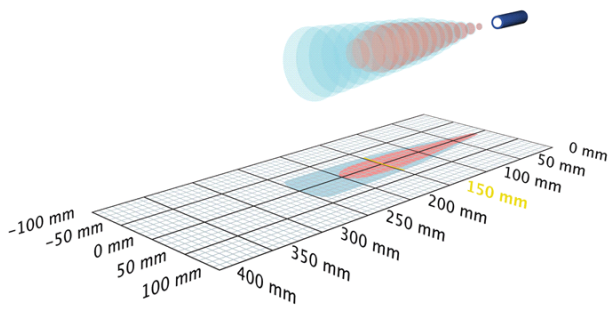

1 x npn

250 mm

measuring range	25 - 250 mm
design	cylindrical M18
operating mode	proximity switch/reflective mode reflective barrier window mode
particularities	UL Listed

ultrasonic-specific

means of measurement	echo propagation time measurement
transducer frequency	380 kHz
blind zone	25 mm
operating range	150 mm
maximum range	250 mm
resolution	0.20 mm
reproducibility	± 0.15 %
accuracy	temperature drift 0.17 %/K

electrical data

operating voltage U_B	10 - 30 V d.c., reverse polarity protection
voltage ripple	± 10 %
no-load current consumption	≤ 40 mA
type of connection	4-pin M12 initiator plug

nero-15/CE

outputs	
output 1	Schaltausgang npn: I_{max} = 200 mA (-U_B+2V)
switching hysteresis	2.0 mm
switching frequency	25 Hz
response time	32 ms
delay prior to availability	< 300 ms

inputs	
input 1	Teach-in input

housing	
material	PBT
ultrasonic transducer	polyurethane foam, epoxy resin with glass contents
max. tightening torque of nuts	1 Nm
class of protection to EN 60529	IP 67
operating temperature	-25°C to +70°C
storage temperature	-40°C to +85°C
weight	15 g
further versions	90° angular head
further versions	nero-15/WK/CE

technical features/characteristics	
temperature compensation	no
controls	control input
scope for settings	Teach-in
Synchronisation	no
multiplex	no
indicators	1 x LED green: working, 1 x LED yellow: switch status
particularities	UL Listed

nero-15/CE

pin assignment

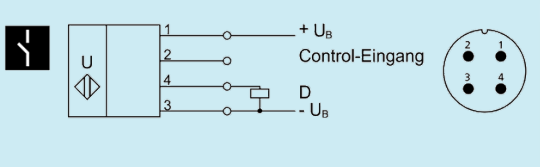

order no.	**nero-15/CE**

The content of this document is subject to technical changes. Specifications in this document are presented in a descriptive way only. They do not warrant any product features.

nero-15/WK/CE

scale drawing

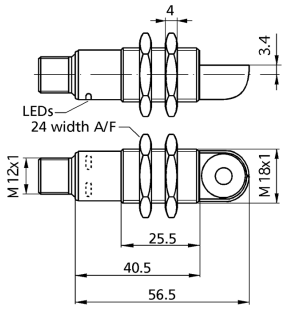

detection zone

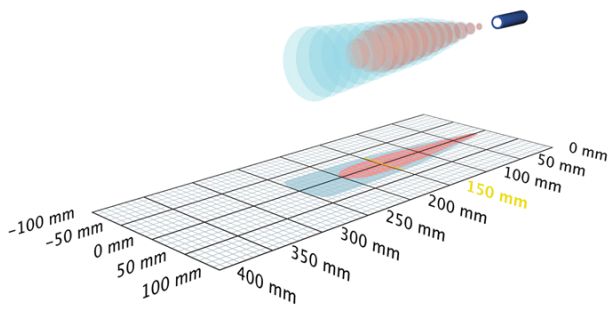

1 x npn

250 mm

measuring range	25 - 250 mm
design	cylindrical M18
operating mode	proximity switch/reflective mode reflective barrier window mode
particularities	90° angular head UL Listed

ultrasonic-specific

means of measurement	echo propagation time measurement
transducer frequency	380 kHz
blind zone	25 mm
operating range	150 mm
maximum range	250 mm
resolution	0.20 mm
reproducibility	± 0.15 %
accuracy	temperature drift 0.17 %/K

electrical data

operating voltage U_B	10 - 30 V d.c., reverse polarity protection
voltage ripple	± 10 %
no-load current consumption	≤ 40 mA
type of connection	4-pin M12 initiator plug

nero-15/WK/CE

outputs	
output 1	Schaltausgang npn: I_{max} = 200 mA (-U_B+2V)
switching hysteresis	2.0 mm
switching frequency	25 Hz
response time	32 ms
delay prior to availability	< 300 ms

inputs	
input 1	Teach-in input

housing	
material	PBT
ultrasonic transducer	polyurethane foam, epoxy resin with glass contents
max. tightening torque of nuts	1 Nm
class of protection to EN 60529	IP 67
operating temperature	-25°C to +70°C
storage temperature	-40°C to +85°C
weight	20 g

technical features/characteristics	
temperature compensation	no
controls	control input
scope for settings	Teach-in
Synchronisation	no
multiplex	no
indicators	1 x LED green: working, 1 x LED yellow: switch status
particularities	90° angular head UL Listed

nero-15/WK/CE

pin assignment

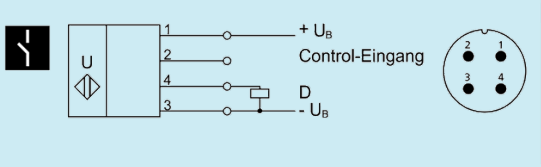

order no.	**nero-15/WK/CE**

The content of this document is subject to technical changes. Specifications in this document are presented in a descriptive way only. They do not warrant any product features.

nero-15/CI

scale drawing

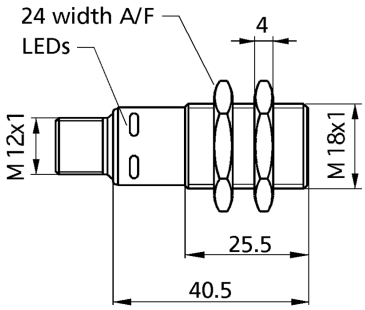

detection zone

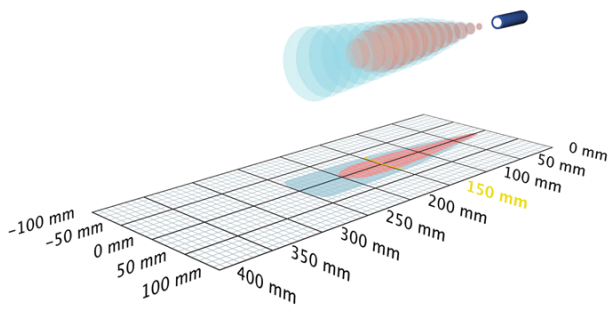

1 x analogue 4-20 mA

250 mm

measuring range	20 - 250 mm
design	cylindrical M18
operating mode	analogue distance measurements
particularities	UL Listed

ultrasonic-specific

means of measurement	echo propagation time measurement
transducer frequency	380 kHz
blind zone	20 mm
operating range	150 mm
maximum range	250 mm
resolution	0.056 mm to 0.297 mm, depending on the analogue window
reproducibility	± 0.15 %
accuracy	temperature drift 0.17 %/K

electrical data

operating voltage U_B	10 - 30 V d.c., reverse polarity protection
voltage ripple	± 10 %
no-load current consumption	≤ 40 mA
type of connection	4-pin M12 initiator plug

nero-15/CI

outputs	
output 1	analogue output current: 4-20 mA switchable rising/falling
response time	32 ms
delay prior to availability	< 300 ms

inputs	
input 1	Teach-in input

housing	
material	PBT
ultrasonic transducer	polyurethane foam, epoxy resin with glass contents
max. tightening torque of nuts	1 Nm
class of protection to EN 60529	IP 67
operating temperature	-25°C to +70°C
storage temperature	-40°C to +85°C
weight	15 g
further versions	90° angular head
further versions	nero-15/WK/CI

technical features/characteristics	
temperature compensation	no
controls	control input
scope for settings	Teach-in
Synchronisation	no
multiplex	no
indicators	LED green: working, LED yellow: state of output
particularities	UL Listed

nero-15/CI

pin assignment

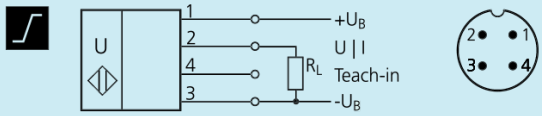

order no.	**nero-15/CI**

The content of this document is subject to technical changes. Specifications in this document are presented in a descriptive way only. They do not warrant any product features.

nero-15/WK/CI

scale drawing

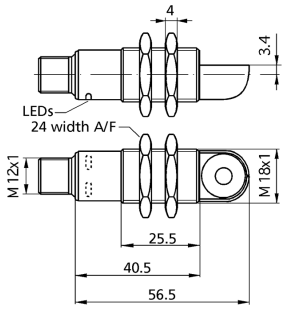

detection zone

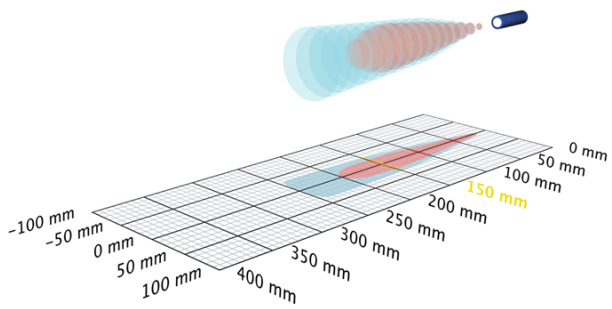

1 x analogue 4-20 mA

250 mm

measuring range	20 - 250 mm
design	cylindrical M18
operating mode	analogue distance measurements
particularities	90° angular head UL Listed

ultrasonic-specific

means of measurement	echo propagation time measurement
transducer frequency	380 kHz
blind zone	20 mm
operating range	150 mm
maximum range	250 mm
resolution	0.056 mm to 0.297 mm, depending on the analogue window
reproducibility	± 0.15 %
accuracy	temperature drift 0.17 %/K

electrical data

operating voltage U_B	10 - 30 V d.c., reverse polarity protection
voltage ripple	± 10 %
no-load current consumption	≤ 40 mA
type of connection	4-pin M12 initiator plug

nero-15/WK/CI

outputs	
output 1	analogue output current: 4-20 mA switchable rising/falling
response time	32 ms
delay prior to availability	< 300 ms

inputs	
input 1	Teach-in input

housing	
material	PBT
ultrasonic transducer	polyurethane foam, epoxy resin with glass contents
max. tightening torque of nuts	1 Nm
class of protection to EN 60529	IP 67
operating temperature	-25°C to +70°C
storage temperature	-40°C to +85°C
weight	20 g

technical features/characteristics	
temperature compensation	no
controls	control input
scope for settings	Teach-in
Synchronisation	no
multiplex	no
indicators	LED green: working, LED yellow: state of output
particularities	90° angular head UL Listed

nero-15/WK/CI

pin assignment

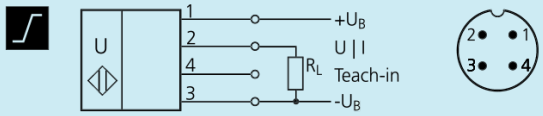

order no.	**nero-15/WK/CI**

The content of this document is subject to technical changes. Specifications in this document are presented in a descriptive way only. They do not warrant any product features.

nero-15/CU

scale drawing

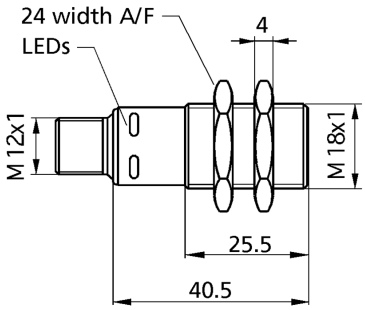

detection zone

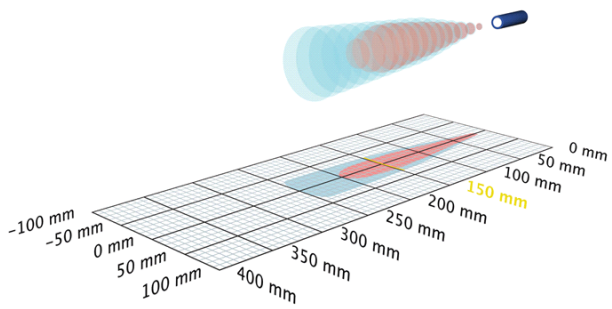

1 x analogue 0-10 V

250 mm

measuring range	20 - 250 mm
design	cylindrical M18
operating mode	analogue distance measurements
particularities	UL Listed

ultrasonic-specific

means of measurement	echo propagation time measurement
transducer frequency	380 kHz
blind zone	20 mm
operating range	150 mm
maximum range	250 mm
resolution	0.056 mm to 0.297 mm, depending on the analogue window
reproducibility	± 0.15 %
accuracy	temperature drift 0.17 %/K

electrical data

operating voltage U_B	15 V bis 30 V DC, verpolfest
voltage ripple	± 10 %
no-load current consumption	≤ 40 mA
type of connection	4-pin M12 initiator plug

nero-15/CU

outputs	
output 1	analogue output voltage: 0-10 V, short-circuit-proof switchable rising/falling
response time	32 ms
delay prior to availability	< 300 ms

inputs	
input 1	Teach-in input

housing	
material	PBT
ultrasonic transducer	polyurethane foam, epoxy resin with glass contents
max. tightening torque of nuts	1 Nm
class of protection to EN 60529	IP 67
operating temperature	-25°C to +70°C
storage temperature	-40°C to +85°C
weight	15 g
further versions	90° angular head
further versions	nero-15/WK/CU

technical features/characteristics	
temperature compensation	no
controls	control input
scope for settings	Teach-in
Synchronisation	no
multiplex	no
indicators	LED green: working, LED yellow: state of output
particularities	UL Listed

nero-15/CU

pin assignment

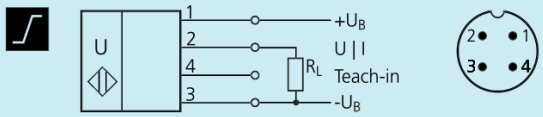

order no.	**nero-15/CU**

The content of this document is subject to technical changes. Specifications in this document are presented in a descriptive way only. They do not warrant any product features.

nero-15/WK/CU

scale drawing

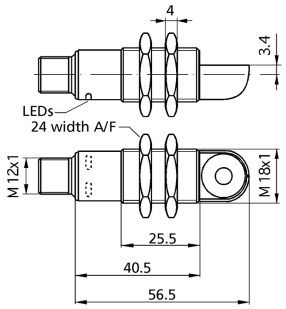

detection zone

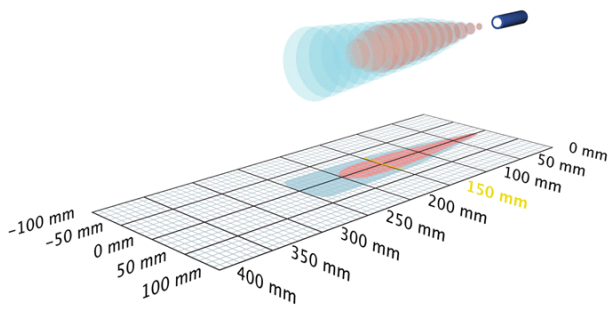

1 x analogue 0-10 V

250 mm

measuring range	20 - 250 mm
design	cylindrical M18
operating mode	analogue distance measurements
particularities	90° angular head UL Listed

ultrasonic-specific

means of measurement	echo propagation time measurement
transducer frequency	380 kHz
blind zone	20 mm
operating range	150 mm
maximum range	250 mm
resolution	0.056 mm to 0.297 mm, depending on the analogue window
reproducibility	± 0.15 %
accuracy	temperature drift 0.17 %/K

electrical data

operating voltage U_B	15 V bis 30 V DC, verpolfest
voltage ripple	± 10 %
no-load current consumption	≤ 40 mA
type of connection	4-pin M12 initiator plug

nero-15/WK/CU

outputs	
output 1	analogue output voltage: 0-10 V, short-circuit-proof switchable rising/falling
response time	32 ms
delay prior to availability	< 300 ms

inputs	
input 1	Teach-in input

housing	
material	PBT
ultrasonic transducer	polyurethane foam, epoxy resin with glass contents
max. tightening torque of nuts	1 Nm
class of protection to EN 60529	IP 67
operating temperature	-25°C to +70°C
storage temperature	-40°C to +85°C
weight	20 g

technical features/characteristics	
temperature compensation	no
controls	control input
scope for settings	Teach-in
Synchronisation	no
multiplex	no
indicators	LED green: working, LED yellow: state of output
particularities	90° angular head UL Listed

nero-15/WK/CU

pin assignment

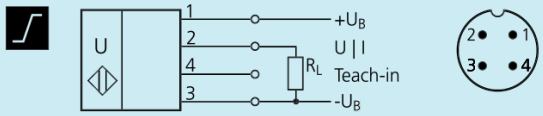

order no.	**nero-15/WK/CU**

The content of this document is subject to technical changes. Specifications in this document are presented in a descriptive way only. They do not warrant any product features.

nero-25/CD

scale drawing

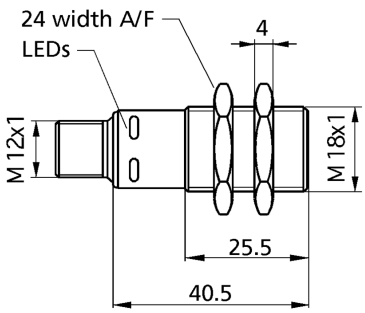

detection zone

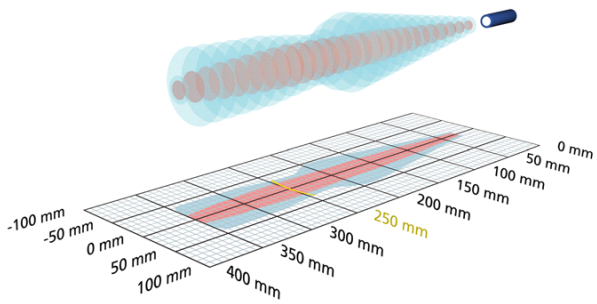

1 x pnp

350 mm

measuring range	30 - 350 mm
design	cylindrical M18
operating mode	proximity switch/reflective mode reflective barrier window mode
particularities	UL Listed

ultrasonic-specific

means of measurement	echo propagation time measurement
transducer frequency	320 kHz
blind zone	30 mm
operating range	250 mm
maximum range	350 mm
resolution	0.20 mm
reproducibility	± 0.15 %
accuracy	temperature drift 0.17 %/K

electrical data

operating voltage U_B	10 - 30 V d.c., reverse polarity protection
voltage ripple	± 10 %
no-load current consumption	≤ 40 mA
type of connection	4-pin M12 initiator plug

nero-25/CD

outputs	
output 1	switching output pnp: I_{max} = 200 mA (U_B-2V)
switching hysteresis	3 mm
switching frequency	25 Hz
response time	32 ms
delay prior to availability	< 300 ms

inputs	
input 1	Teach-in input

housing	
material	PBT
ultrasonic transducer	polyurethane foam, epoxy resin with glass contents
max. tightening torque of nuts	1 Nm
class of protection to EN 60529	IP 67
operating temperature	-25°C to +70°C
storage temperature	-40°C to +85°C
weight	15 g
further versions	90° angular head
further versions	nero-25/WK/CD

technical features/characteristics	
temperature compensation	no
controls	control input
scope for settings	Teach-in
Synchronisation	no
multiplex	no
indicators	1 x LED green: working, 1 x LED yellow: switch status
particularities	UL Listed

nero-25/CD

pin assignment

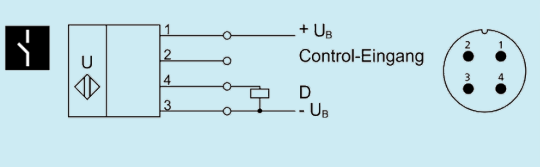

order no.	**nero-25/CD**

The content of this document is subject to technical changes. Specifications in this document are presented in a descriptive way only. They do not warrant any product features.

nero-25/WK/CD

scale drawing

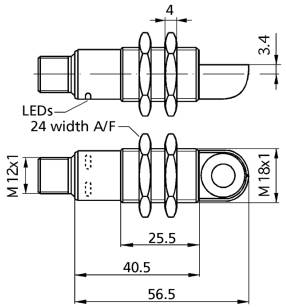

detection zone

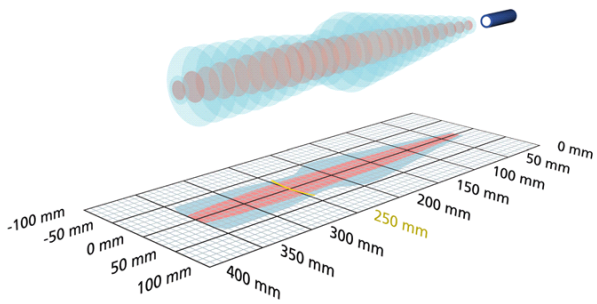

1 x pnp

350 mm

measuring range	30 - 350 mm
design	cylindrical M18
operating mode	proximity switch/reflective mode reflective barrier window mode
particularities	90° angular head UL Listed

ultrasonic-specific

means of measurement	echo propagation time measurement
transducer frequency	320 kHz
blind zone	30 mm
operating range	250 mm
maximum range	350 mm
resolution	0.20 mm
reproducibility	± 0.15 %
accuracy	temperature drift 0.17 %/K

electrical data

operating voltage U_B	10 - 30 V d.c., reverse polarity protection
voltage ripple	± 10 %
no-load current consumption	≤ 40 mA
type of connection	4-pin M12 initiator plug

nero-25/WK/CD

outputs	
output 1	switching output pnp: I_{max} = 200 mA (U_B-2V)
switching hysteresis	3 mm
switching frequency	25 Hz
response time	32 ms
delay prior to availability	< 300 ms

inputs	
input 1	Teach-in input

housing	
material	PBT
ultrasonic transducer	polyurethane foam, epoxy resin with glass contents
max. tightening torque of nuts	1 Nm
class of protection to EN 60529	IP 67
operating temperature	-25°C to +70°C
storage temperature	-40°C to +85°C
weight	20 g

technical features/characteristics	
temperature compensation	no
controls	control input
scope for settings	Teach-in
Synchronisation	no
multiplex	no
indicators	1 x LED green: working, 1 x LED yellow: switch status
particularities	90° angular head UL Listed

nero-25/WK/CD

pin assignment

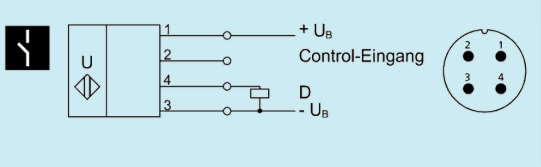

order no.	**nero-25/WK/CD**

The content of this document is subject to technical changes. Specifications in this document are presented in a descriptive way only. They do not warrant any product features.

nero-25/CE

scale drawing

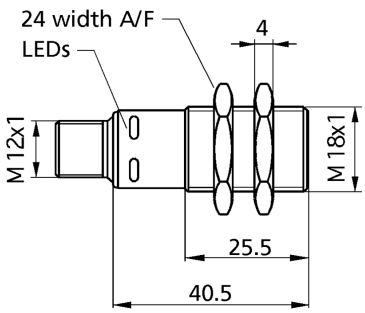

detection zone

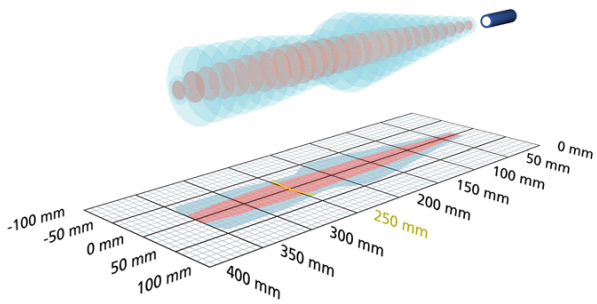

1 x npn

350 mm

measuring range	30 - 350 mm
design	cylindrical M18
operating mode	proximity switch/reflective mode reflective barrier window mode
particularities	UL Listed

ultrasonic-specific

means of measurement	echo propagation time measurement
transducer frequency	320 kHz
blind zone	30 mm
operating range	250 mm
maximum range	350 mm
resolution	0.20 mm
reproducibility	± 0.15 %
accuracy	temperature drift 0.17 %/K

electrical data

operating voltage U_B	10 - 30 V d.c., reverse polarity protection
voltage ripple	± 10 %
no-load current consumption	≤ 40 mA
type of connection	4-pin M12 initiator plug

nero-25/CE

outputs	
output 1	Schaltausgang npn: I_{max} = 200 mA (-U_B+2V)
switching hysteresis	3 mm
switching frequency	25 Hz
response time	32 ms
delay prior to availability	< 300 ms

inputs	
input 1	Teach-in input

housing	
material	PBT
ultrasonic transducer	polyurethane foam, epoxy resin with glass contents
max. tightening torque of nuts	1 Nm
class of protection to EN 60529	IP 67
operating temperature	-25°C to +70°C
storage temperature	-40°C to +85°C
weight	15 g
further versions	90° angular head
further versions	nero-25/WK/CE

technical features/characteristics	
temperature compensation	no
controls	control input
scope for settings	Teach-in
Synchronisation	no
multiplex	no
indicators	1 x LED green: working, 1 x LED yellow: switch status
particularities	UL Listed

nero-25/CE

pin assignment

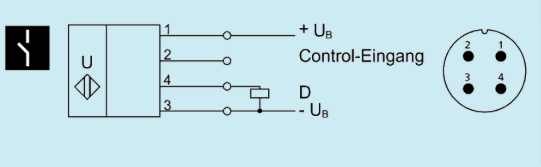

order no.	**nero-25/CE**

The content of this document is subject to technical changes. Specifications in this document are presented in a descriptive way only. They do not warrant any product features.

nero-25/WK/CE

scale drawing

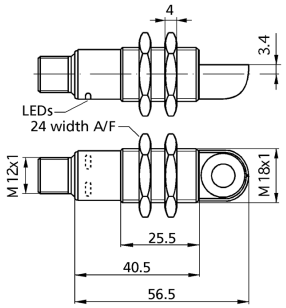

detection zone

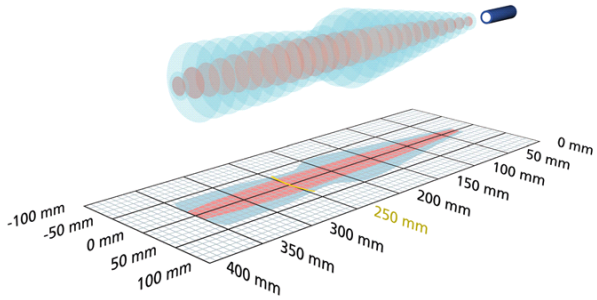

1 x npn

350 mm

measuring range	30 - 350 mm
design	cylindrical M18
operating mode	proximity switch/reflective mode reflective barrier window mode
particularities	90° angular head UL Listed

ultrasonic-specific

means of measurement	echo propagation time measurement
transducer frequency	320 kHz
blind zone	30 mm
operating range	250 mm
maximum range	350 mm
resolution	0.20 mm
reproducibility	± 0.15 %
accuracy	temperature drift 0.17 %/K

electrical data

operating voltage U_B	10 - 30 V d.c., reverse polarity protection
voltage ripple	± 10 %
no-load current consumption	≤ 40 mA
type of connection	4-pin M12 initiator plug

nero-25/WK/CE

outputs	
output 1	Schaltausgang npn: I_{max} = 200 mA (-U_B+2V)
switching hysteresis	3 mm
switching frequency	25 Hz
response time	32 ms
delay prior to availability	< 300 ms

inputs	
input 1	Teach-in input

housing	
material	PBT
ultrasonic transducer	polyurethane foam, epoxy resin with glass contents
max. tightening torque of nuts	1 Nm
class of protection to EN 60529	IP 67
operating temperature	-25°C to +70°C
storage temperature	-40°C to +85°C
weight	20 g

technical features/characteristics	
temperature compensation	no
controls	control input
scope for settings	Teach-in
Synchronisation	no
multiplex	no
indicators	1 x LED green: working, 1 x LED yellow: switch status
particularities	90° angular head UL Listed

nero-25/WK/CE

pin assignment

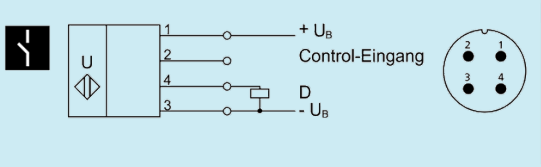

order no.	**nero-25/WK/CE**

The content of this document is subject to technical changes. Specifications in this document are presented in a descriptive way only. They do not warrant any product features.

nero-25/CI

scale drawing

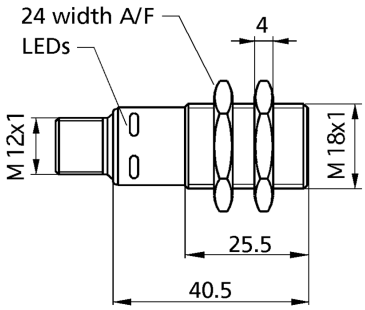

detection zone

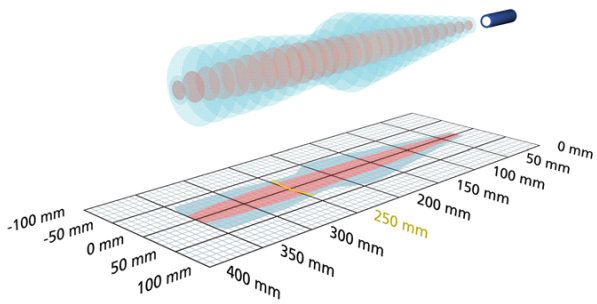

1 x analogue 4-20 mA

350 mm

measuring range	30 - 350 mm
design	cylindrical M18
operating mode	analogue distance measurements
particularities	UL Listed

ultrasonic-specific

means of measurement	echo propagation time measurement
transducer frequency	320 kHz
blind zone	30 mm
operating range	250 mm
maximum range	350 mm
resolution	0.056 mm to 0.413 mm, depending on the analogue window
reproducibility	± 0.15 %
accuracy	temperature drift 0.17 %/K

electrical data

operating voltage U_B	10 - 30 V d.c., reverse polarity protection
voltage ripple	± 10 %
no-load current consumption	≤ 40 mA
type of connection	4-pin M12 initiator plug

nero-25/CI

outputs	
output 1	analogue output current: 4-20 mA switchable rising/falling
response time	32 ms
delay prior to availability	< 300 ms

inputs	
input 1	Teach-in input

housing	
material	PBT
ultrasonic transducer	polyurethane foam, epoxy resin with glass contents
max. tightening torque of nuts	1 Nm
class of protection to EN 60529	IP 67
operating temperature	-25°C to +70°C
storage temperature	-40°C to +85°C
weight	15 g
further versions	90° angular head
further versions	nero-25/WK/CI

technical features/characteristics	
temperature compensation	no
controls	control input
scope for settings	Teach-in
Synchronisation	no
multiplex	no
indicators	LED green: working, LED yellow: state of output
particularities	UL Listed

nero-25/CI

pin assignment

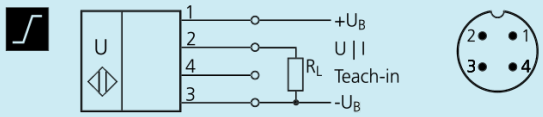

order no.	**nero-25/CI**

The content of this document is subject to technical changes. Specifications in this document are presented in a descriptive way only. They do not warrant any product features.

nero-25/WK/CI

scale drawing

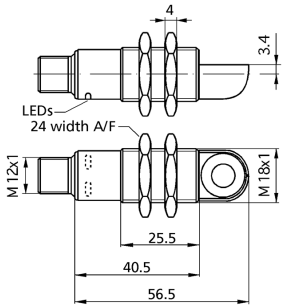

detection zone

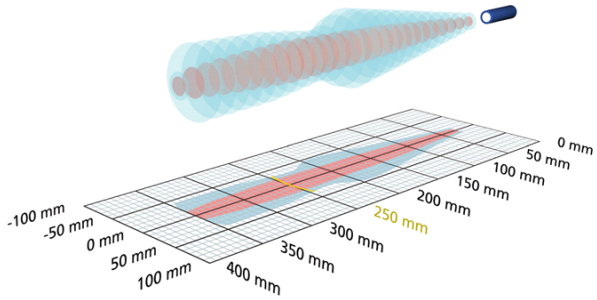

1 x analogue 4-20 mA

350 mm

measuring range	30 - 350 mm
design	cylindrical M18
operating mode	analogue distance measurements
particularities	90° angular head UL Listed

ultrasonic-specific

means of measurement	echo propagation time measurement
transducer frequency	320 kHz
blind zone	30 mm
operating range	250 mm
maximum range	350 mm
resolution	0.056 mm to 0.413 mm, depending on the analogue window
reproducibility	± 0.15 %
accuracy	temperature drift 0.17 %/K

electrical data

operating voltage U_B	10 - 30 V d.c., reverse polarity protection
voltage ripple	± 10 %
no-load current consumption	≤ 40 mA
type of connection	4-pin M12 initiator plug

nero-25/WK/CI

outputs	
output 1	analogue output current: 4-20 mA switchable rising/falling
response time	32 ms
delay prior to availability	< 300 ms

inputs	
input 1	Teach-in input

housing	
material	PBT
ultrasonic transducer	polyurethane foam, epoxy resin with glass contents
max. tightening torque of nuts	1 Nm
class of protection to EN 60529	IP 67
operating temperature	-25°C to +70°C
storage temperature	-40°C to +85°C
weight	20 g

technical features/characteristics	
temperature compensation	no
controls	control input
scope for settings	Teach-in
Synchronisation	no
multiplex	no
indicators	LED green: working, LED yellow: state of output
particularities	90° angular head UL Listed

nero-25/WK/CI

pin assignment

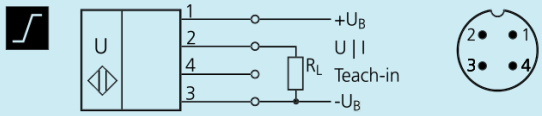

order no.	**nero-25/WK/CI**

The content of this document is subject to technical changes. Specifications in this document are presented in a descriptive way only. They do not warrant any product features.

nero-25/CU

scale drawing

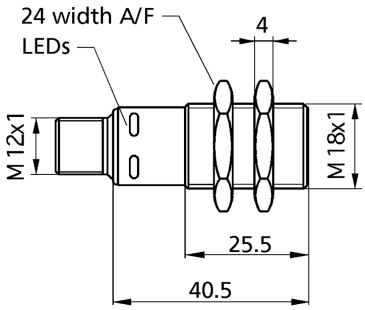

detection zone

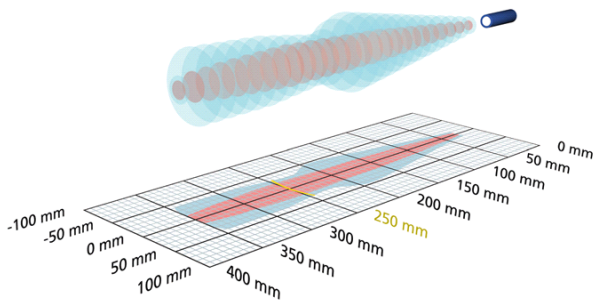

1 x analogue 0-10 V

350 mm

measuring range	30 - 350 mm
design	cylindrical M18
operating mode	analogue distance measurements
particularities	UL Listed

ultrasonic-specific

means of measurement	echo propagation time measurement
transducer frequency	320 kHz
blind zone	30 mm
operating range	250 mm
maximum range	350 mm
resolution	0.056 mm to 0.413 mm, depending on the analogue window
reproducibility	± 0.15 %
accuracy	temperature drift 0.17 %/K

electrical data

operating voltage U_B	15 V bis 30 V DC, verpolfest
voltage ripple	± 10 %
no-load current consumption	≤ 40 mA
type of connection	4-pin M12 initiator plug

nero-25/CU

outputs	
output 1	analogue output voltage: 0-10 V, short-circuit-proof switchable rising/falling
response time	32 ms
delay prior to availability	< 300 ms

inputs	
input 1	Teach-in input

housing	
material	PBT
ultrasonic transducer	polyurethane foam, epoxy resin with glass contents
max. tightening torque of nuts	1 Nm
class of protection to EN 60529	IP 67
operating temperature	-25°C to +70°C
storage temperature	-40°C to +85°C
weight	15 g
further versions	90° angular head
further versions	nero-25/WK/CU

technical features/characteristics	
temperature compensation	no
controls	control input
scope for settings	Teach-in
Synchronisation	no
multiplex	no
indicators	LED green: working, LED yellow: state of output
particularities	UL Listed

nero-25/CU

pin assignment

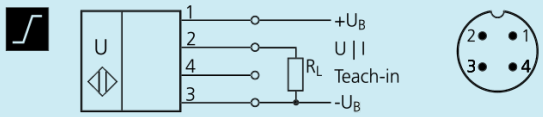

order no.	**nero-25/CU**

The content of this document is subject to technical changes. Specifications in this document are presented in a descriptive way only. They do not warrant any product features.

nero-25/WK/CU

scale drawing

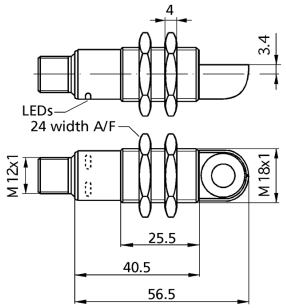

detection zone

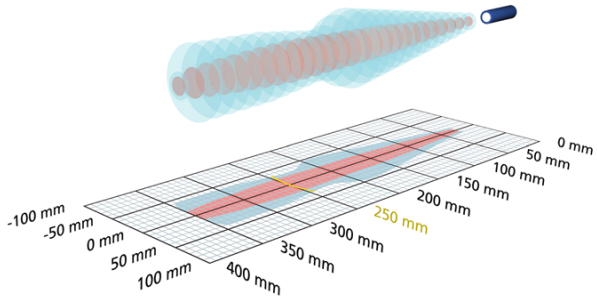

1 x analogue 0-10 V

350 mm

measuring range	30 - 350 mm
design	cylindrical M18
operating mode	analogue distance measurements
particularities	90° angular head UL Listed

ultrasonic-specific

means of measurement	echo propagation time measurement
transducer frequency	320 kHz
blind zone	30 mm
operating range	250 mm
maximum range	350 mm
resolution	0.056 mm to 0.413 mm, depending on the analogue window
reproducibility	± 0.15 %
accuracy	temperature drift 0.17 %/K

electrical data

operating voltage U_B	15 V bis 30 V DC, verpolfest
voltage ripple	± 10 %
no-load current consumption	≤ 40 mA
type of connection	4-pin M12 initiator plug

nero-25/WK/CU

outputs	
output 1	analogue output voltage: 0-10 V, short-circuit-proof switchable rising/falling
response time	32 ms
delay prior to availability	< 300 ms

inputs	
input 1	Teach-in input

housing	
material	PBT
ultrasonic transducer	polyurethane foam, epoxy resin with glass contents
max. tightening torque of nuts	1 Nm
class of protection to EN 60529	IP 67
operating temperature	-25°C to +70°C
storage temperature	-40°C to +85°C
weight	20 g

technical features/characteristics	
temperature compensation	no
controls	control input
scope for settings	Teach-in
Synchronisation	no
multiplex	no
indicators	LED green: working, LED yellow: state of output
particularities	90° angular head UL Listed

nero-25/WK/CU

pin assignment

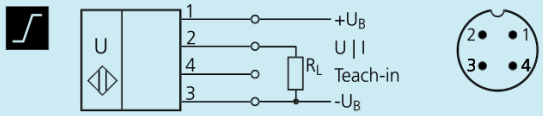

order no.	**nero-25/WK/CU**

The content of this document is subject to technical changes. Specifications in this document are presented in a descriptive way only. They do not warrant any product features.

nero-35/CD

scale drawing

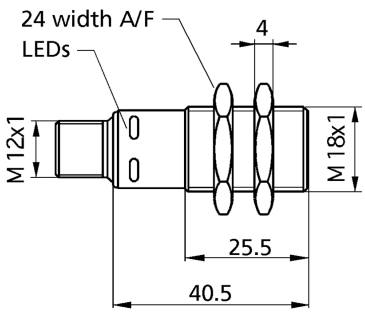

detection zone

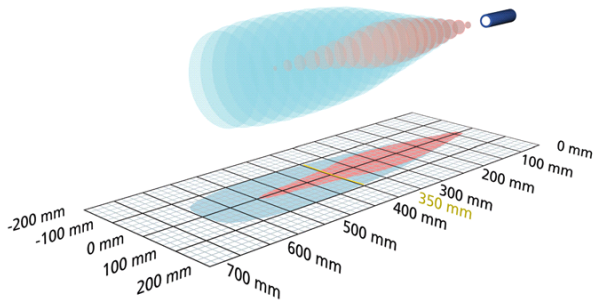

1 x pnp

600 mm

measuring range	65 - 600 mm
design	cylindrical M18
operating mode	proximity switch/reflective mode reflective barrier window mode
particularities	UL Listed

ultrasonic-specific

means of measurement	echo propagation time measurement
transducer frequency	400 kHz
blind zone	65 mm
operating range	350 mm
maximum range	600 mm
resolution	0.20 mm
reproducibility	± 0.15 %
accuracy	temperature drift 0.17 %/K

electrical data

operating voltage U_B	10 - 30 V d.c., reverse polarity protection
voltage ripple	± 10 %
no-load current consumption	≤ 40 mA
type of connection	4-pin M12 initiator plug

nero-35/CD

outputs	
output 1	switching output pnp: I_{max} = 200 mA (U_B-2V)
switching hysteresis	5 mm
switching frequency	12 Hz
response time	64 ms
delay prior to availability	< 300 ms

inputs	
input 1	Teach-in input

housing	
material	PBT
ultrasonic transducer	polyurethane foam, epoxy resin with glass contents
max. tightening torque of nuts	1 Nm
class of protection to EN 60529	IP 67
operating temperature	-25°C to +70°C
storage temperature	-40°C to +85°C
weight	15 g
further versions	90° angular head
further versions	nero-35/WK/CD

technical features/characteristics	
temperature compensation	no
controls	control input
scope for settings	Teach-in
Synchronisation	no
multiplex	no
indicators	1 x LED green: working, 1 x LED yellow: switch status
particularities	UL Listed

nero-35/CD

pin assignment

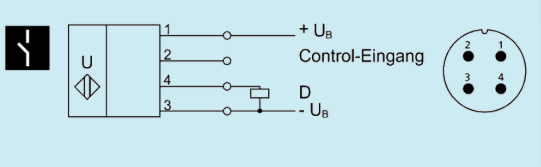

order no.	**nero-35/CD**

The content of this document is subject to technical changes. Specifications in this document are presented in a descriptive way only. They do not warrant any product features.

nero-35/WK/CD

scale drawing

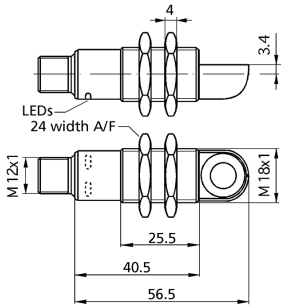

detection zone

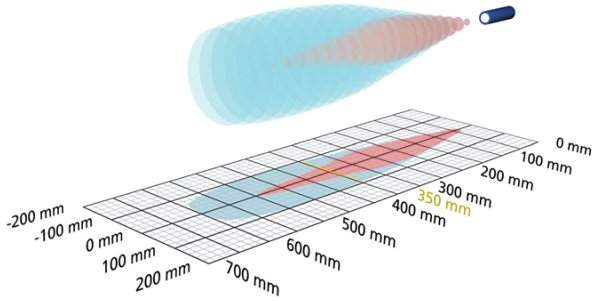

1 x pnp

600 mm

measuring range	65 - 600 mm
design	cylindrical M18
operating mode	proximity switch/reflective mode reflective barrier window mode
particularities	90° angular head UL Listed

ultrasonic-specific

means of measurement	echo propagation time measurement
transducer frequency	400 kHz
blind zone	65 mm
operating range	350 mm
maximum range	600 mm
resolution	0.20 mm
reproducibility	± 0.15 %
accuracy	temperature drift 0.17 %/K

electrical data

operating voltage U_B	10 - 30 V d.c., reverse polarity protection
voltage ripple	± 10 %
no-load current consumption	≤ 40 mA
type of connection	4-pin M12 initiator plug

nero-35/WK/CD

outputs	
output 1	switching output pnp: I_{max} = 200 mA (U_B-2V)
switching hysteresis	5 mm
switching frequency	12 Hz
response time	64 ms
delay prior to availability	< 300 ms

inputs	
input 1	Teach-in input

housing	
material	PBT
ultrasonic transducer	polyurethane foam, epoxy resin with glass contents
max. tightening torque of nuts	1 Nm
class of protection to EN 60529	IP 67
operating temperature	-25°C to +70°C
storage temperature	-40°C to +85°C
weight	20 g

technical features/characteristics	
temperature compensation	no
controls	control input
scope for settings	Teach-in
Synchronisation	no
multiplex	no
indicators	1 x LED green: working, 1 x LED yellow: switch status
particularities	90° angular head UL Listed

nero-35/WK/CD

pin assignment

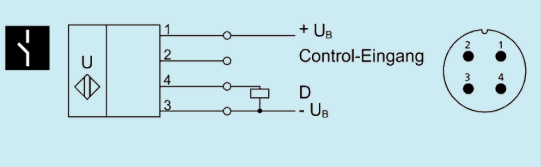

order no.	**nero-35/WK/CD**

The content of this document is subject to technical changes. Specifications in this document are presented in a descriptive way only. They do not warrant any product features.

nero-35/CE

scale drawing

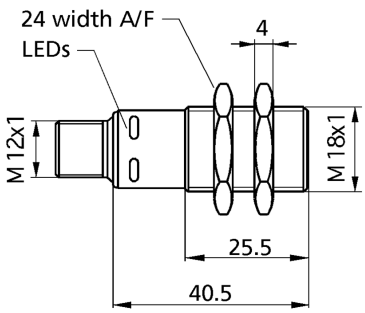

detection zone

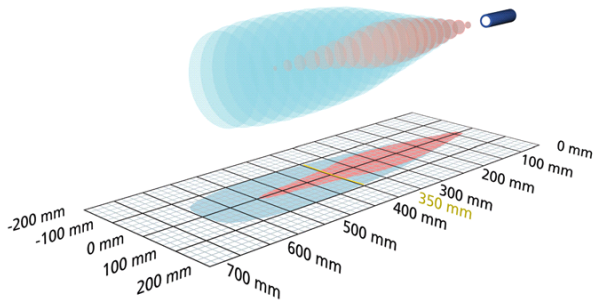

1 x npn

600 mm

measuring range	65 - 600 mm
design	cylindrical M18
operating mode	proximity switch/reflective mode reflective barrier window mode
particularities	UL Listed

ultrasonic-specific

means of measurement	echo propagation time measurement
transducer frequency	400 kHz
blind zone	65 mm
operating range	350 mm
maximum range	600 mm
resolution	0.20 mm
reproducibility	± 0.15 %
accuracy	temperature drift 0.17 %/K

electrical data

operating voltage U_B	10 - 30 V d.c., reverse polarity protection
voltage ripple	± 10 %
no-load current consumption	≤ 40 mA
type of connection	4-pin M12 initiator plug

nero-35/CE

outputs	
output 1	Schaltausgang npn: I_{max} = 200 mA (-U_B+2V)
switching hysteresis	5 mm
switching frequency	12 Hz
response time	64 ms
delay prior to availability	< 300 ms

inputs	
input 1	Teach-in input

housing	
material	PBT
ultrasonic transducer	polyurethane foam, epoxy resin with glass contents
max. tightening torque of nuts	1 Nm
class of protection to EN 60529	IP 67
operating temperature	-25°C to +70°C
storage temperature	-40°C to +85°C
weight	15 g
further versions	90° angular head
further versions	nero-100/WK/CE

technical features/characteristics	
temperature compensation	no
controls	control input
scope for settings	Teach-in
Synchronisation	no
multiplex	no
indicators	1 x LED green: working, 1 x LED yellow: switch status
particularities	UL Listed

nero-35/CE

pin assignment

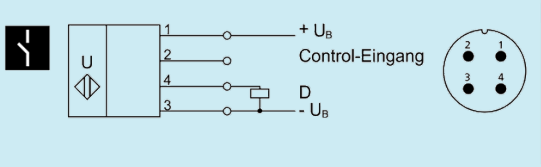

order no.	**nero-35/CE**

The content of this document is subject to technical changes. Specifications in this document are presented in a descriptive way only. They do not warrant any product features.

nero-35/WK/CE

scale drawing

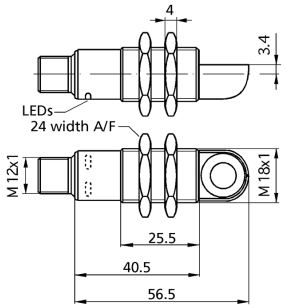

detection zone

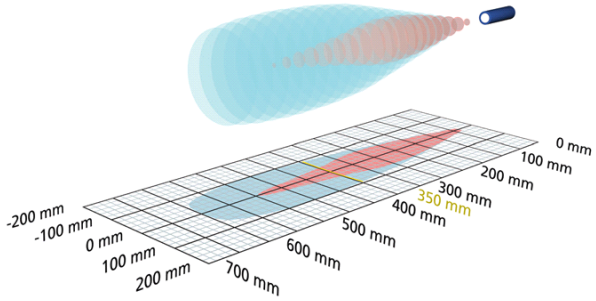

1 x npn

600 mm

measuring range	65 - 600 mm
design	cylindrical M18
operating mode	proximity switch/reflective mode reflective barrier window mode
particularities	90° angular head UL Listed

ultrasonic-specific

means of measurement	echo propagation time measurement
transducer frequency	400 kHz
blind zone	65 mm
operating range	350 mm
maximum range	600 mm
resolution	0.20 mm
reproducibility	± 0.15 %
accuracy	temperature drift 0.17 %/K

electrical data

operating voltage U_B	10 - 30 V d.c., reverse polarity protection
voltage ripple	± 10 %
no-load current consumption	≤ 40 mA
type of connection	4-pin M12 initiator plug

nero-35/WK/CE

outputs	
output 1	Schaltausgang npn: I_{max} = 200 mA (-U_B+2V)
switching hysteresis	5 mm
switching frequency	12 Hz
response time	64 ms
delay prior to availability	< 300 ms

inputs	
input 1	Teach-in input

housing	
material	PBT
ultrasonic transducer	polyurethane foam, epoxy resin with glass contents
max. tightening torque of nuts	1 Nm
class of protection to EN 60529	IP 67
operating temperature	-25°C to +70°C
storage temperature	-40°C to +85°C
weight	20 g

technical features/characteristics	
temperature compensation	no
controls	control input
scope for settings	Teach-in
Synchronisation	no
multiplex	no
indicators	1 x LED green: working, 1 x LED yellow: switch status
particularities	90° angular head UL Listed

nero-35/WK/CE

pin assignment

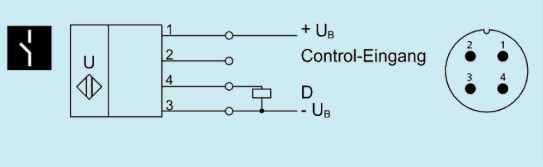

order no.	**nero-35/WK/CE**

The content of this document is subject to technical changes. Specifications in this document are presented in a descriptive way only. They do not warrant any product features.

nero-35/CI

scale drawing

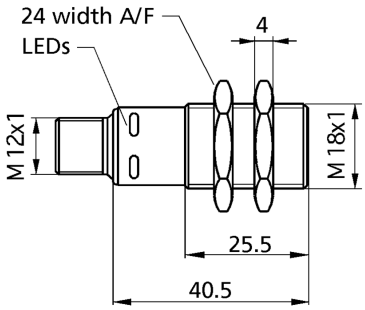

detection zone

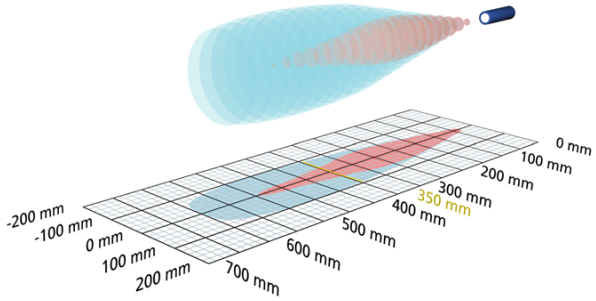

1 x analogue 4-20 mA

600 mm

measuring range	65 - 600 mm
design	cylindrical M18
operating mode	analogue distance measurements
particularities	UL Listed

ultrasonic-specific

means of measurement	echo propagation time measurement
transducer frequency	400 kHz
blind zone	65 mm
operating range	350 mm
maximum range	600 mm
resolution	0.056 mm to 0.691 mm, depending on the analogue window
reproducibility	± 0.15 %
accuracy	temperature drift 0.17 %/K

electrical data

operating voltage U_B	10 - 30 V d.c., reverse polarity protection
voltage ripple	± 10 %
no-load current consumption	≤ 40 mA
type of connection	4-pin M12 initiator plug

nero-35/CI

outputs	
output 1	analogue output current: 4-20 mA switchable rising/falling
response time	64 ms
delay prior to availability	< 300 ms

inputs	
input 1	Teach-in input

housing	
material	PBT
ultrasonic transducer	polyurethane foam, epoxy resin with glass contents
max. tightening torque of nuts	1 Nm
class of protection to EN 60529	IP 67
operating temperature	-25°C to +70°C
storage temperature	-40°C to +85°C
weight	15 g
further versions	90° angular head
further versions	nero-35/WK/CI

technical features/characteristics	
temperature compensation	no
controls	control input
scope for settings	Teach-in
Synchronisation	no
multiplex	no
indicators	LED green: working, LED yellow: state of output
particularities	UL Listed

nero-35/CI

pin assignment

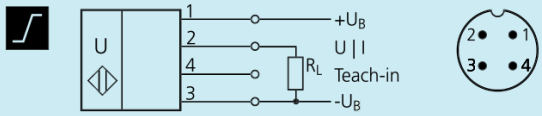

order no.	**nero-35/CI**

The content of this document is subject to technical changes. Specifications in this document are presented in a descriptive way only. They do not warrant any product features.

nero-35/WK/CI

scale drawing

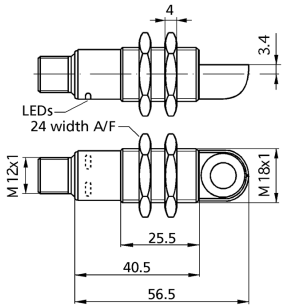

detection zone

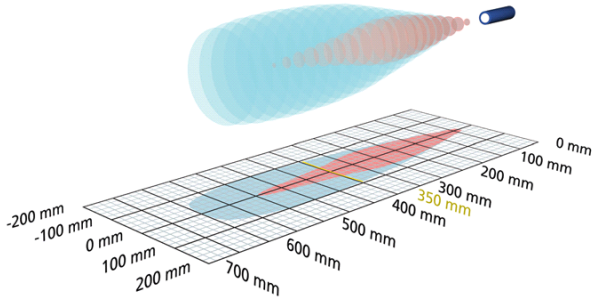

1 x analogue 4-20 mA

600 mm

measuring range	65 - 600 mm
design	cylindrical M18
operating mode	analogue distance measurements
particularities	90° angular head UL Listed

ultrasonic-specific

means of measurement	echo propagation time measurement
transducer frequency	400 kHz
blind zone	65 mm
operating range	350 mm
maximum range	600 mm
resolution	0.056 mm to 0.691 mm, depending on the analogue window
reproducibility	± 0.15 %
accuracy	temperature drift 0.17 %/K

electrical data

operating voltage U_B	10 - 30 V d.c., reverse polarity protection
voltage ripple	± 10 %
no-load current consumption	≤ 40 mA
type of connection	4-pin M12 initiator plug

nero-35/WK/CI

outputs	
output 1	analogue output current: 4-20 mA switchable rising/falling
response time	64 ms
delay prior to availability	< 300 ms

inputs	
input 1	Teach-in input

housing	
material	PBT
ultrasonic transducer	polyurethane foam, epoxy resin with glass contents
max. tightening torque of nuts	1 Nm
class of protection to EN 60529	IP 67
operating temperature	-25°C to +70°C
storage temperature	-40°C to +85°C
weight	20 g

technical features/characteristics	
temperature compensation	no
controls	control input
scope for settings	Teach-in
Synchronisation	no
multiplex	no
indicators	LED green: working, LED yellow: state of output
particularities	90° angular head UL Listed

nero-35/WK/CI

pin assignment

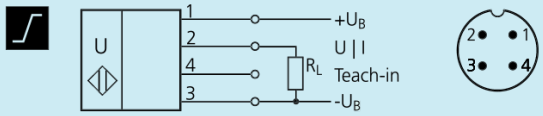

order no.	**nero-35/WK/CI**

The content of this document is subject to technical changes. Specifications in this document are presented in a descriptive way only. They do not warrant any product features.

nero-35/CU

scale drawing

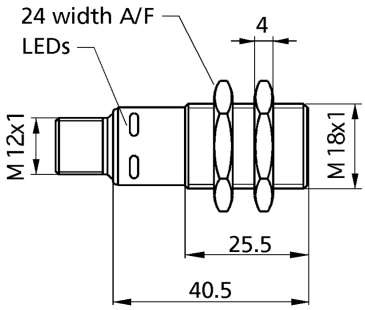

detection zone

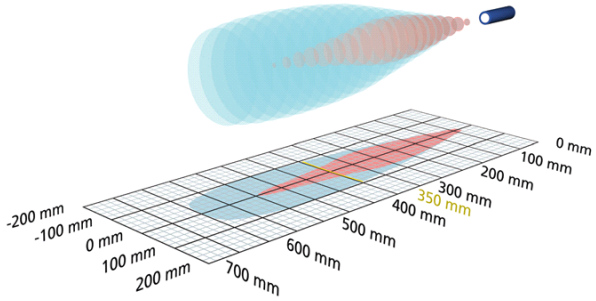

1 x analogue 0-10 V

600 mm

measuring range	65 - 600 mm
design	cylindrical M18
operating mode	analogue distance measurements
particularities	UL Listed

ultrasonic-specific

means of measurement	echo propagation time measurement
transducer frequency	400 kHz
blind zone	65 mm
operating range	350 mm
maximum range	600 mm
resolution	0.056 mm to 0.691 mm, depending on the analogue window
reproducibility	± 0.15 %
accuracy	temperature drift 0.17 %/K

electrical data

operating voltage U_B	15 V bis 30 V DC, verpolfest
voltage ripple	± 10 %
no-load current consumption	≤ 40 mA
type of connection	4-pin M12 initiator plug

nero-35/CU

outputs	
output 1	analogue output voltage: 0-10 V, short-circuit-proof switchable rising/falling
response time	64 ms
delay prior to availability	< 300 ms

inputs	
input 1	Teach-in input

housing	
material	PBT
ultrasonic transducer	polyurethane foam, epoxy resin with glass contents
max. tightening torque of nuts	1 Nm
class of protection to EN 60529	IP 67
operating temperature	-25°C to +70°C
storage temperature	-40°C to +85°C
weight	15 g
further versions	90° angular head
further versions	nero-35/WK/CU

technical features/characteristics	
temperature compensation	no
controls	control input
scope for settings	Teach-in
Synchronisation	no
multiplex	no
indicators	LED green: working, LED yellow: state of output
particularities	UL Listed

nero-35/CU

pin assignment

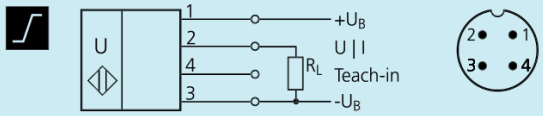

order no.	**nero-35/CU**

The content of this document is subject to technical changes. Specifications in this document are presented in a descriptive way only. They do not warrant any product features.

nero-35/WK/CU

scale drawing

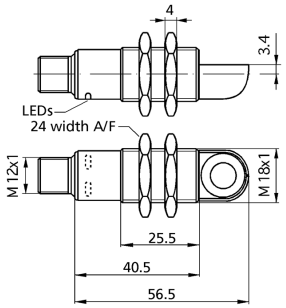

detection zone

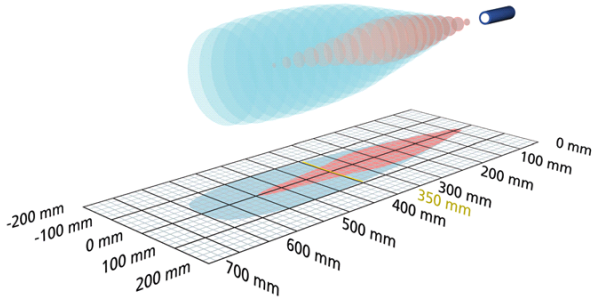

1 x analogue 0-10 V

600 mm

measuring range	65 - 600 mm
design	cylindrical M18
operating mode	analogue distance measurements
particularities	90° angular head UL Listed

ultrasonic-specific

means of measurement	echo propagation time measurement
transducer frequency	400 kHz
blind zone	65 mm
operating range	350 mm
maximum range	600 mm
resolution	0.056 mm to 0.691 mm, depending on the analogue window
reproducibility	± 0.15 %
accuracy	temperature drift 0.17 %/K

electrical data

operating voltage U_B	15 V bis 30 V DC, verpolfest
voltage ripple	± 10 %
no-load current consumption	≤ 40 mA
type of connection	4-pin M12 initiator plug

nero-35/WK/CU

outputs	
output 1	analogue output voltage: 0-10 V, short-circuit-proof switchable rising/falling
response time	64 ms
delay prior to availability	< 300 ms

inputs	
input 1	Teach-in input

housing	
material	PBT
ultrasonic transducer	polyurethane foam, epoxy resin with glass contents
max. tightening torque of nuts	1 Nm
class of protection to EN 60529	IP 67
operating temperature	-25°C to +70°C
storage temperature	-40°C to +85°C
weight	20 g

technical features/characteristics	
temperature compensation	no
controls	control input
scope for settings	Teach-in
Synchronisation	no
multiplex	no
indicators	LED green: working, LED yellow: state of output
particularities	90° angular head UL Listed

nero-35/WK/CU

pin assignment

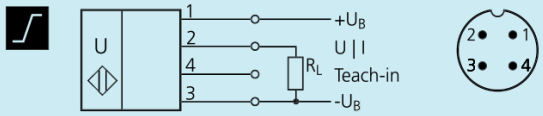

order no.	**nero-35/WK/CU**

The content of this document is subject to technical changes. Specifications in this document are presented in a descriptive way only. They do not warrant any product features.

nero-100/CD

scale drawing

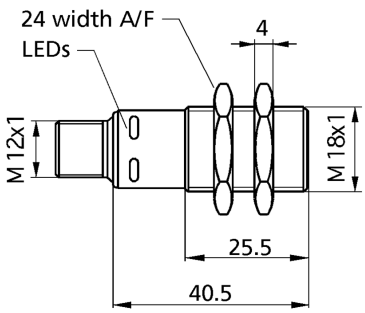

detection zone

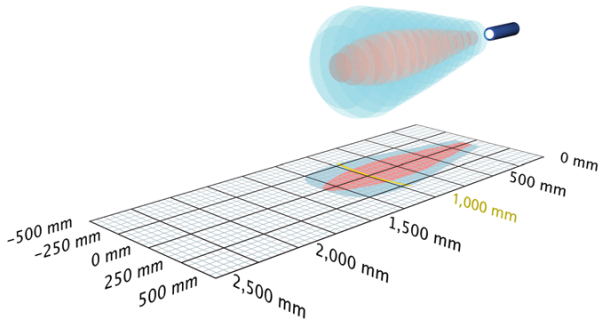

1 x pnp

1,300 mm

measuring range	120 - 1.300 mm
design	cylindrical M18
operating mode	proximity switch/reflective mode reflective barrier window mode
particularities	UL Listed

ultrasonic-specific

means of measurement	echo propagation time measurement
transducer frequency	200 kHz
blind zone	120 mm
operating range	1,000 mm
maximum range	1,300 mm
resolution	0.20 mm
reproducibility	± 0.15 %
accuracy	temperature drift 0.17 %/K

electrical data

operating voltage U_B	10 - 30 V d.c., reverse polarity protection
voltage ripple	± 10 %
no-load current consumption	≤ 40 mA
type of connection	4-pin M12 initiator plug

nero-100/CD

outputs	
output 1	switching output pnp: I_{max} = 200 mA (U_B-2V)
switching hysteresis	20 mm
switching frequency	10 Hz
response time	80 ms
delay prior to availability	< 300 ms

inputs	
input 1	Teach-in input

housing	
material	PBT
ultrasonic transducer	polyurethane foam, epoxy resin with glass contents
max. tightening torque of nuts	1 Nm
class of protection to EN 60529	IP 67
operating temperature	-25°C to +70°C
storage temperature	-40°C to +85°C
weight	15 g
further versions	90° angular head
further versions	nero-100/WK/CD

technical features/characteristics	
temperature compensation	no
controls	control input
scope for settings	Teach-in
Synchronisation	no
multiplex	no
indicators	1 x LED green: working, 1 x LED yellow: switch status
particularities	UL Listed

nero-100/CD

pin assignment

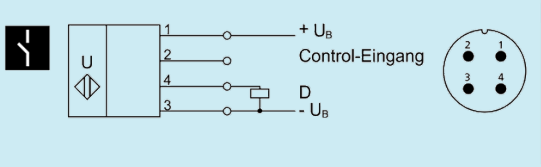

order no.	**nero-100/CD**

The content of this document is subject to technical changes. Specifications in this document are presented in a descriptive way only. They do not warrant any product features.

nero-100/WK/CD

scale drawing

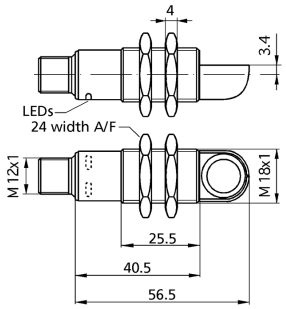

detection zone

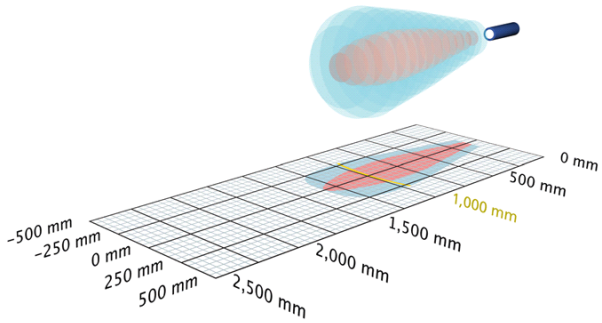

1 x pnp

1,300 mm

measuring range	120 - 1.300 mm
design	cylindrical M18
operating mode	proximity switch/reflective mode reflective barrier window mode
particularities	90° angular head UL Listed

ultrasonic-specific

means of measurement	echo propagation time measurement
transducer frequency	200 kHz
blind zone	120 mm
operating range	1,000 mm
maximum range	1,300 mm
resolution	0.20 mm
reproducibility	± 0.15 %
accuracy	temperature drift 0.17 %/K

electrical data

operating voltage U_B	10 - 30 V d.c., reverse polarity protection
voltage ripple	± 10 %
no-load current consumption	≤ 40 mA
type of connection	4-pin M12 initiator plug

nero-100/WK/CD

outputs	
output 1	switching output pnp: I_{max} = 200 mA (U_B-2V)
switching hysteresis	20 mm
switching frequency	10 Hz
response time	80 ms
delay prior to availability	< 300 ms

inputs	
input 1	Teach-in input

housing	
material	PBT
ultrasonic transducer	polyurethane foam, epoxy resin with glass contents
max. tightening torque of nuts	1 Nm
class of protection to EN 60529	IP 67
operating temperature	-25°C to +70°C
storage temperature	-40°C to +85°C
weight	20 g

technical features/characteristics	
temperature compensation	no
controls	control input
scope for settings	Teach-in
Synchronisation	no
multiplex	no
indicators	1 x LED green: working, 1 x LED yellow: switch status
particularities	90° angular head UL Listed

nero-100/WK/CD

pin assignment

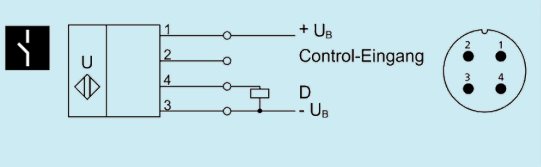

order no.	**nero-100/WK/CD**

The content of this document is subject to technical changes. Specifications in this document are presented in a descriptive way only. They do not warrant any product features.

nero-100/CE

scale drawing

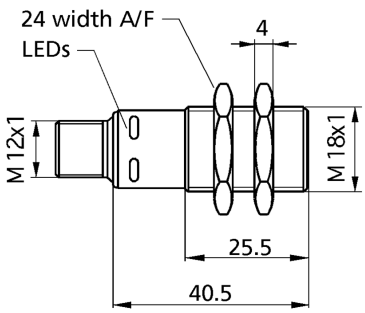

detection zone

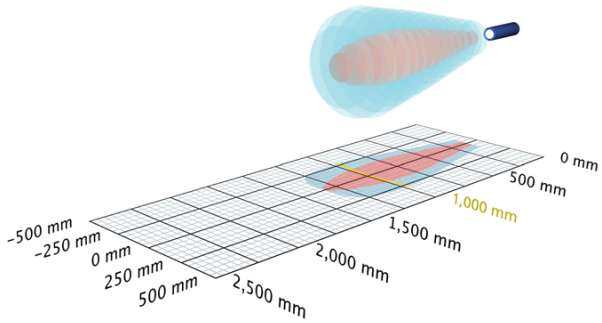

1 x npn

1,300 mm

measuring range	120 - 1.300 mm
design	cylindrical M18
operating mode	proximity switch/reflective mode reflective barrier window mode
particularities	UL Listed

ultrasonic-specific

means of measurement	echo propagation time measurement
transducer frequency	200 kHz
blind zone	120 mm
operating range	1,000 mm
maximum range	1,300 mm
resolution	0.20 mm
reproducibility	± 0.15 %
accuracy	temperature drift 0.17 %/K

electrical data

operating voltage U_B	10 - 30 V d.c., reverse polarity protection
voltage ripple	± 10 %
no-load current consumption	≤ 40 mA
type of connection	4-pin M12 initiator plug

nero-100/CE

outputs	
output 1	Schaltausgang npn: I_{max} = 200 mA (-U_B+2V)
switching hysteresis	20 mm
switching frequency	10 Hz
response time	100 ms
delay prior to availability	< 300 ms

inputs	
input 1	Teach-in input

housing	
material	PBT
ultrasonic transducer	polyurethane foam, epoxy resin with glass contents
max. tightening torque of nuts	1 Nm
class of protection to EN 60529	IP 67
operating temperature	-25°C to +70°C
storage temperature	-40°C to +85°C
weight	15 g
further versions	90° angular head
further versions	nero-100/WK/CE

technical features/characteristics	
temperature compensation	no
controls	control input
scope for settings	Teach-in
Synchronisation	no
multiplex	no
indicators	1 x LED green: working, 1 x LED yellow: switch status
particularities	UL Listed

nero-100/CE

pin assignment

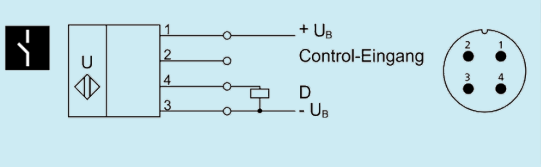

order no.	**nero-100/CE**

The content of this document is subject to technical changes. Specifications in this document are presented in a descriptive way only. They do not warrant any product features.

nero-100/WK/CE

scale drawing

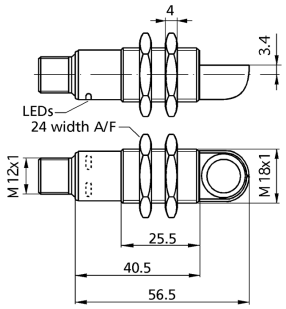

detection zone

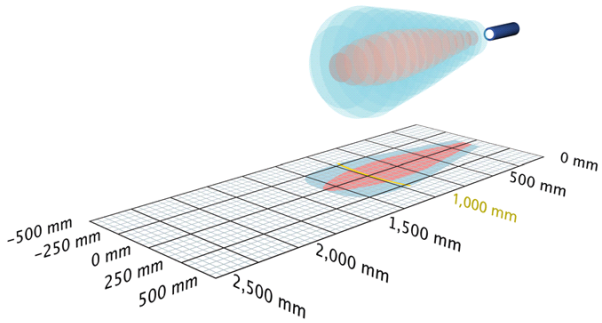

1 x npn

1,300 mm

measuring range	120 - 1.300 mm
design	cylindrical M18
operating mode	proximity switch/reflective mode reflective barrier window mode
particularities	90° angular head UL Listed

ultrasonic-specific

means of measurement	echo propagation time measurement
transducer frequency	200 kHz
blind zone	120 mm
operating range	1,000 mm
maximum range	1,300 mm
resolution	0.20 mm
reproducibility	± 0.15 %
accuracy	temperature drift 0.17 %/K

electrical data

operating voltage U_B	10 - 30 V d.c., reverse polarity protection
voltage ripple	± 10 %
no-load current consumption	≤ 40 mA
type of connection	4-pin M12 initiator plug

nero-100/WK/CE

outputs	
output 1	Schaltausgang npn: I_{max} = 200 mA (-U_B+2V)
switching hysteresis	20 mm
switching frequency	10 Hz
response time	100 ms
delay prior to availability	< 300 ms

inputs	
input 1	Teach-in input

housing	
material	PBT
ultrasonic transducer	polyurethane foam, epoxy resin with glass contents
max. tightening torque of nuts	1 Nm
class of protection to EN 60529	IP 67
operating temperature	-25°C to +70°C
storage temperature	-40°C to +85°C
weight	20 g

technical features/characteristics	
temperature compensation	no
controls	control input
scope for settings	Teach-in
Synchronisation	no
multiplex	no
indicators	1 x LED green: working, 1 x LED yellow: switch status
particularities	90° angular head UL Listed

nero-100/WK/CE

pin assignment

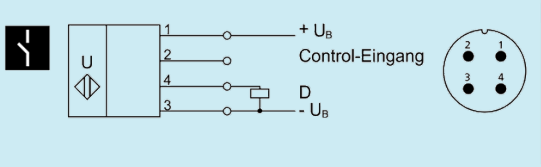

order no.	**nero-100/WK/CE**

The content of this document is subject to technical changes. Specifications in this document are presented in a descriptive way only. They do not warrant any product features.

nero-100/CI

scale drawing

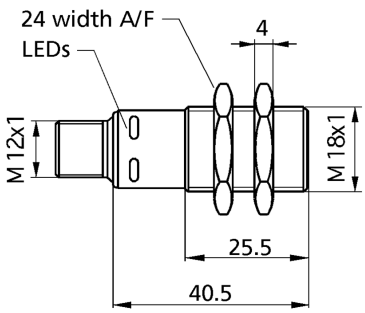

detection zone

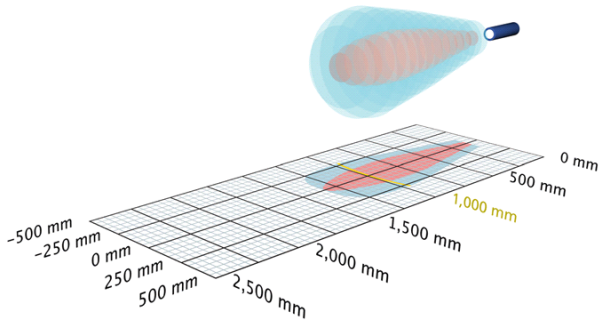

1 x analogue 4-20 mA

1,300 mm

measuring range	120 - 1.300 mm
design	cylindrical M18
operating mode	analogue distance measurements
particularities	UL Listed

ultrasonic-specific

means of measurement	echo propagation time measurement
transducer frequency	200 kHz
blind zone	120 mm
operating range	1,000 mm
maximum range	1,300 mm
resolution	0.056 mm to 1.525 mm, depending on the analogue window
reproducibility	± 0.15 %
accuracy	temperature drift 0.17 %/K

electrical data

operating voltage U_B	10 - 30 V d.c., reverse polarity protection
voltage ripple	± 10 %
no-load current consumption	≤ 40 mA
type of connection	4-pin M12 initiator plug

nero-100/CI

outputs	
output 1	analogue output current: 4-20 mA switchable rising/falling
response time	80 ms
delay prior to availability	< 300 ms

inputs	
input 1	Teach-in input

housing	
material	PBT
ultrasonic transducer	polyurethane foam, epoxy resin with glass contents
max. tightening torque of nuts	1 Nm
class of protection to EN 60529	IP 67
operating temperature	-25°C to +70°C
storage temperature	-40°C to +85°C
weight	15 g
further versions	90° angular head
further versions	nero-100/WK/CI

technical features/characteristics	
temperature compensation	no
controls	control input
scope for settings	Teach-in
Synchronisation	no
multiplex	no
indicators	LED green: working, LED yellow: state of output
particularities	UL Listed

nero-100/CI

pin assignment

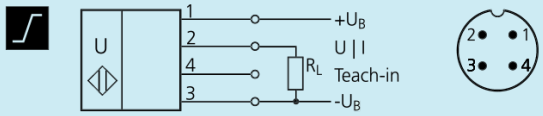

order no.	**nero-100/CI**

The content of this document is subject to technical changes. Specifications in this document are presented in a descriptive way only. They do not warrant any product features.

nero-100/WK/CI

scale drawing

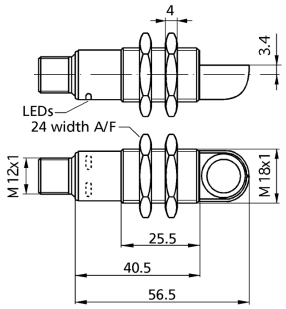

detection zone

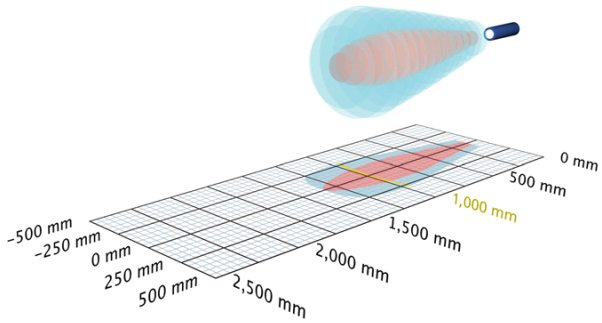

1 x analogue 4-20 mA

1,300 mm

measuring range	120 - 1.300 mm
design	cylindrical M18
operating mode	analogue distance measurements
particularities	90° angular head UL Listed

ultrasonic-specific

means of measurement	echo propagation time measurement
transducer frequency	200 kHz
blind zone	120 mm
operating range	1,000 mm
maximum range	1,300 mm
resolution	0.056 mm to 1.525 mm, depending on the analogue window
reproducibility	± 0.15 %
accuracy	temperature drift 0.17 %/K

electrical data

operating voltage U_B	10 - 30 V d.c., reverse polarity protection
voltage ripple	± 10 %
no-load current consumption	≤ 40 mA
type of connection	4-pin M12 initiator plug

nero-100/WK/CI

outputs	
output 1	analogue output current: 4-20 mA switchable rising/falling
response time	80 ms
delay prior to availability	< 300 ms

inputs	
input 1	Teach-in input

housing	
material	PBT
ultrasonic transducer	polyurethane foam, epoxy resin with glass contents
max. tightening torque of nuts	1 Nm
class of protection to EN 60529	IP 67
operating temperature	-25°C to +70°C
storage temperature	-40°C to +85°C
weight	20 g

technical features/characteristics	
temperature compensation	no
controls	control input
scope for settings	Teach-in
Synchronisation	no
multiplex	no
indicators	LED green: working, LED yellow: state of output
particularities	90° angular head UL Listed

nero-100/WK/CI

pin assignment

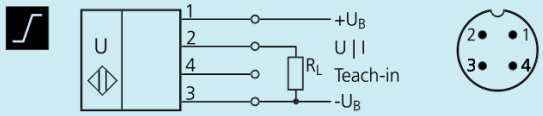

order no.	**nero-100/WK/CI**

The content of this document is subject to technical changes. Specifications in this document are presented in a descriptive way only. They do not warrant any product features.

nero-100/CU

scale drawing

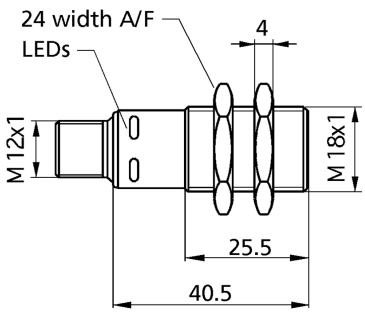

detection zone

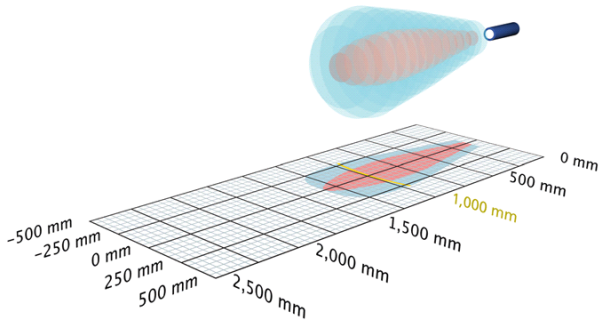

1 x analogue 0-10 V

1,300 mm

measuring range	120 - 1.300 mm
design	cylindrical M18
operating mode	analogue distance measurements
particularities	UL Listed

ultrasonic-specific

means of measurement	echo propagation time measurement
transducer frequency	200 kHz
blind zone	120 mm
operating range	1,000 mm
maximum range	1,300 mm
resolution	0.056 mm to 1.525 mm, depending on the analogue window
reproducibility	± 0.15 %
accuracy	temperature drift 0.17 %/K

electrical data

operating voltage U_B	15 V bis 30 V DC, verpolfest
voltage ripple	± 10 %
no-load current consumption	≤ 40 mA
type of connection	4-pin M12 initiator plug

nero-100/CU

outputs	
output 1	analogue output voltage: 0-10 V, short-circuit-proof switchable rising/falling
response time	80 ms
delay prior to availability	< 300 ms

inputs	
input 1	Teach-in input

housing	
material	PBT
ultrasonic transducer	polyurethane foam, epoxy resin with glass contents
max. tightening torque of nuts	1 Nm
class of protection to EN 60529	IP 67
operating temperature	-25°C to +70°C
storage temperature	-40°C to +85°C
weight	15 g
further versions	90° angular head
further versions	nero-100/WK/CU

technical features/characteristics	
temperature compensation	no
controls	control input
scope for settings	Teach-in
Synchronisation	no
multiplex	no
indicators	LED green: working, LED yellow: state of output
particularities	UL Listed

nero-100/CU

pin assignment

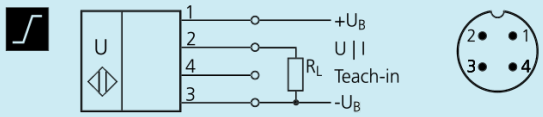

order no.	**nero-100/CU**

The content of this document is subject to technical changes. Specifications in this document are presented in a descriptive way only. They do not warrant any product features.

nero-100/WK/CU

scale drawing

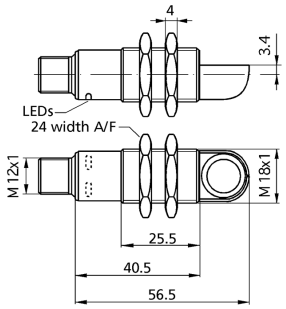

detection zone

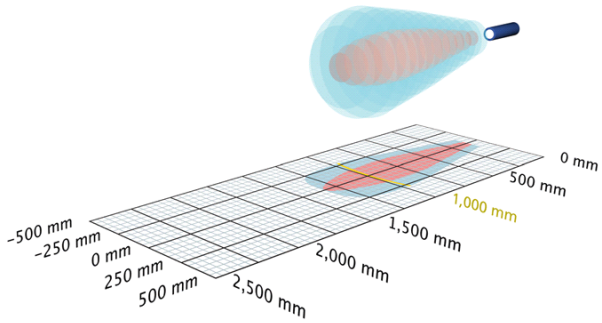

1 x analogue 0-10 V

1,300 mm

measuring range	120 - 1.300 mm
design	cylindrical M18
operating mode	analogue distance measurements
particularities	90° angular head UL Listed

ultrasonic-specific

means of measurement	echo propagation time measurement
transducer frequency	200 kHz
blind zone	120 mm
operating range	1,000 mm
maximum range	1,300 mm
resolution	0.056 mm to 1.525 mm, depending on the analogue window
reproducibility	± 0.15 %
accuracy	temperature drift 0.17 %/K

electrical data

operating voltage U_B	15 V bis 30 V DC, verpolfest
voltage ripple	± 10 %
no-load current consumption	≤ 40 mA
type of connection	4-pin M12 initiator plug

nero-100/WK/CU

outputs	
output 1	analogue output voltage: 0-10 V, short-circuit-proof switchable rising/falling
response time	80 ms
delay prior to availability	< 300 ms

inputs	
input 1	Teach-in input

housing	
material	PBT
ultrasonic transducer	polyurethane foam, epoxy resin with glass contents
max. tightening torque of nuts	1 Nm
class of protection to EN 60529	IP 67
operating temperature	-25°C to +70°C
storage temperature	-40°C to +85°C
weight	20 g

technical features/characteristics	
temperature compensation	no
controls	control input
scope for settings	Teach-in
Synchronisation	no
multiplex	no
indicators	LED green: working, LED yellow: state of output
particularities	90° angular head UL Listed

nero-100/WK/CU

pin assignment

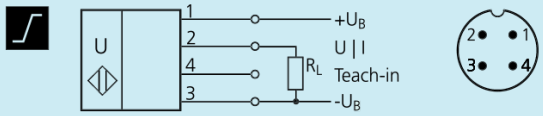

order no.	**nero-100/WK/CU**

The content of this document is subject to technical changes. Specifications in this document are presented in a descriptive way only. They do not warrant any product features.